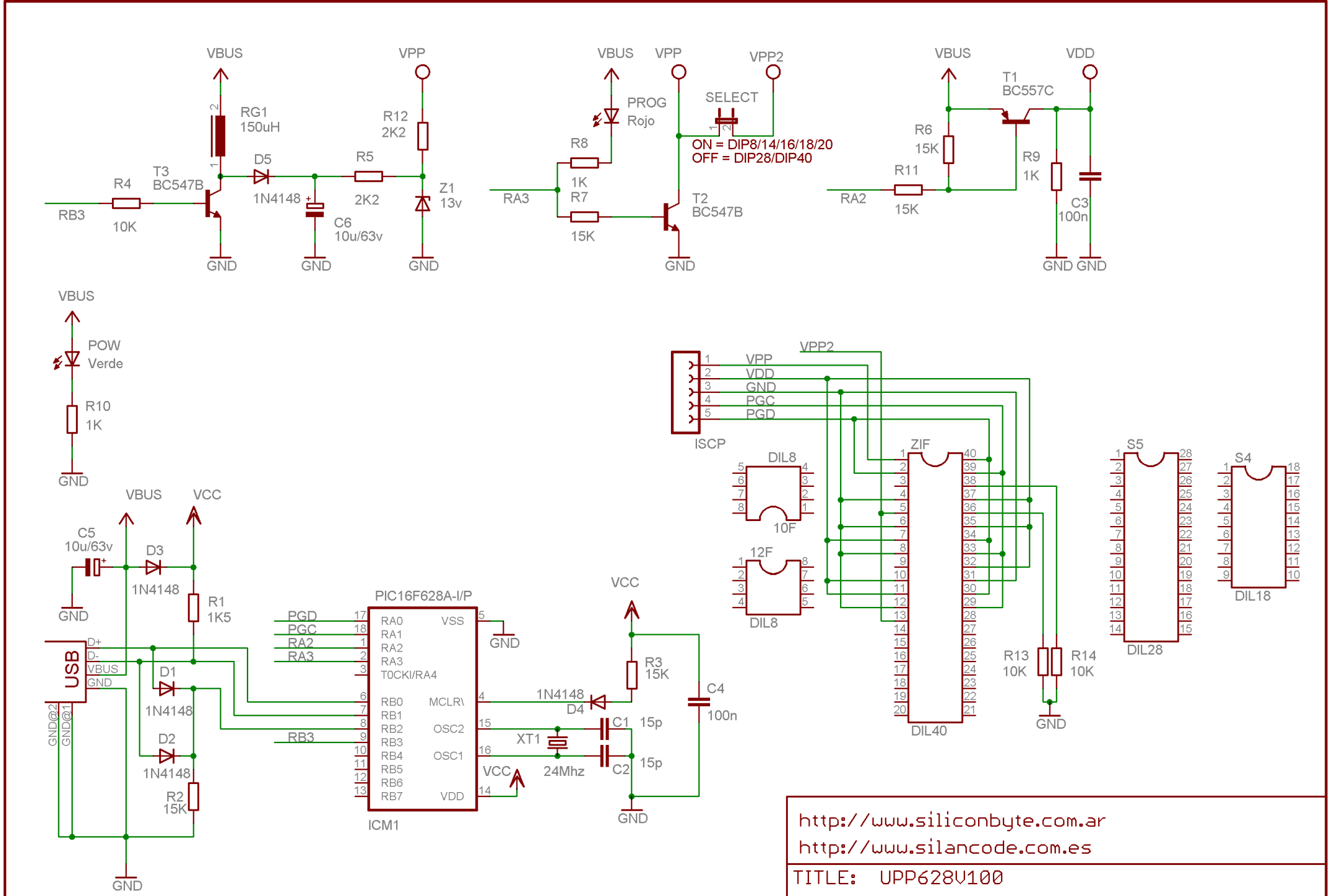


http://www.siliconbyte.com.ar
http://www.silancode.com.es

TITLE: UPP628V100

Document Number:

REV: 1.00

Date: 05/07/2007 22:14:48

Sheet: 1/1